FILE NO.	C-CD-203-02

NOTES:

① MAT'L: COPPER (STOCK TKN. $\frac{.040}{1.02}$ ±.001)

PLATING: ELECTRO-TIN (.0003 MIN.)

② INSULATION: MOLDED PVC (YELLOW)

STUD SIZES: (±.005)

02 = .094
04 = .119
06 = .146
08 = .173
10 = .198
14 = .265
56 = .328
38 = .390

"UL" LISTING #E32244
"CSA" LISTING #18689

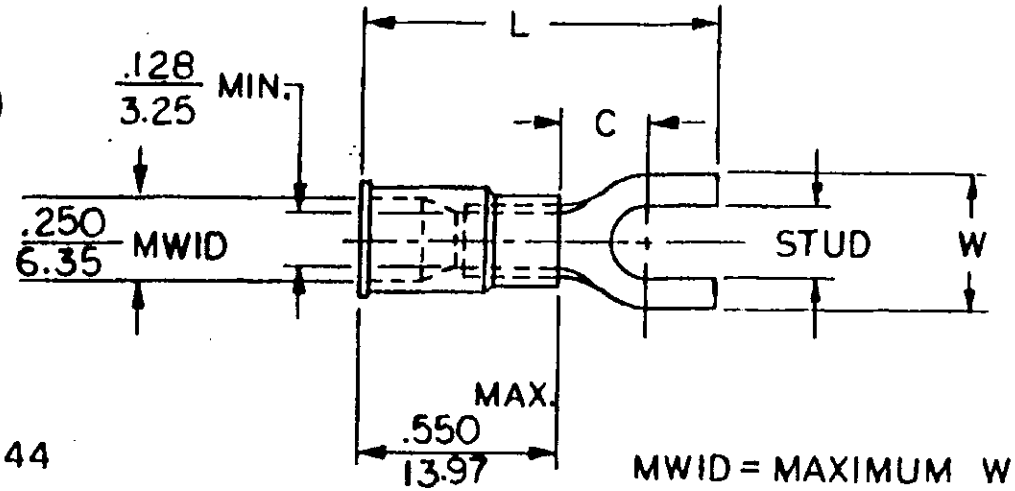

MWID = MAXIMUM WIRE INSULATION DIAMETER

WIRE SIZE: 12 — 10 AWG / 4.0-6.0 MM²

ALL DIMENSIONS = INCHES / MM

PART NUMBER	"W" ±.010	"C" MIN.	"L" MAX.				AVAILABLE STUD SIZES	
C-241-	.375 / 9.53	.301 / 7.65	1.103 / 28.02				06X, 08X, 10X	
C-268-	.533 / 13.54	.393 / 9.98	1.256 / 31.90				10X, 14X, 56X	

DIMENSIONAL TOLERANCES UNLESS OTHERWISE SPECIFIED			REFERENCE	SCALE: NTS	DATE	TITLE:	
FRAC.	DEC.	ANG.		DRWN. BY: JJ	10-31-84	SPADE TONGUE TERMINAL INSULKRIMP 200-SERIES	ETC molex INCORPORATED
±	±	±		CHKD. BY: GZ	11-26-84		DWG. NO. A CUSTOMER DWG.
				APPRD. BY:			