Honeywell | Honeywell Sensing and Productivity Solutions

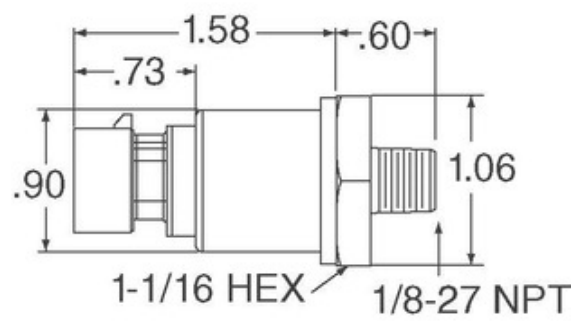

Image may be representation. See specifications for product details.

MLH010BGB06E

Part Number:	MLH010BGB06E
Manufacturer/Brand:	Honeywell Sensing and Productivity Solutions
Product description	SENSOR GAUGE 0-10 BAR
Datasheets:	1.MLH010BGB06E.pdf 2.MLH010BGB06E.pdf
RoHs Status	Lead free / RoHS Compliant
Stock Condition	870 pcs stock
Ship From	Hong Kong
Shipment Way	DHL/Fedex/TNT/UPS/EMS

REQUEST FOR QUOTATION

Specifications of MLH010BGB06E

PART NUMBER	MLH010BGB06E
MANUFACTURER	Honeywell Sensing and Productivity Solutions
DESCRIPTION	SENSOR GAUGE 0-10 BAR
LEAD FREE STATUS / ROHS STATUS	Lead free / RoHS Compliant
QUANTITY AVAILABLE	870 pcs
DATA SHEET	1.MLH010BGB06E.pdf 2.MLH010BGB06E.pdf
VOLTAGE - SUPPLY	7 V ~ 30 V
TERMINATION STYLE	Packard Metripak 150
SUPPLIER DEVICE PACKAGE	-
SERIES	MLH
PRESSURE TYPE	Vented Gauge
PORT STYLE	Threaded
PORT SIZE	Male - 1/8" (3.18mm) NPT
PACKAGE / CASE	Cylinder, Metal
OUTPUT TYPE	Analog Voltage
OUTPUT	0.5 V ~ 4.5 V
OPERATING TEMPERATURE	-40°C ~ 125°C
OPERATING PRESSURE	145.04 PSI (1000 kPa)
MOISTURE SENSITIVITY LEVEL (MSL)	1 (Unlimited)
MAXIMUM PRESSURE	435.11 PSI (3000 kPa)
LEAD FREE STATUS / ROHS STATUS	Lead free / RoHS Compliant
FEATURES	Amplified Output, Temperature Compensated
DETAILED DESCRIPTION	Pressure Sensor 145.04 PSI (1000 kPa) Vented Gauge Male - 1/8" (3.18mm) NPT 0.5 V ~ 4.5 V Cylinder, Metal
ACCURACY	±0.25%

Related Tags

Honeywell Sensing and Productivity Solutions MLH010BGB06E	MLH010BGB06E Distributor	MLH010BGB06E Supplier
MLH010BGB06E Price	MLH010BGB06E Pictures	MLH010BGB06E Image
MLH010BGB06E PDF Datasheet	MLH010BGB06E Download Datasheet	MLH010BGB06E Datasheet
MLH010BGB06E Stock	Buy MLH010BGB06E	Buy Honeywell Sensing and Productivity Solutions MLH010BGB06E
Honeywell Sensing and Productivity Solutions MLH010BGB06E	Honeywell Sensing and Productivity Solutions Supplier	Honeywell Sensing and Productivity Solutions Distributor
Honeywell Sensing and Productivity Solutions MLH010BGB06E	HONEYWELL MLH010BGB06E	Honeywell Sensing and Control EMEA MLH010BGB06E
Honeywell Sensing and Productivity Solutions T&M MLH010BGB06E		

Related Products

MLH010BGB06A
Manufacturers: Honeywell Sensing and Productivity Solutions
Description: SENSOR GAUGE 0-10 BAR
In stock: 949 pcs
RFQ

MLH010BGB20B
Manufacturers: Honeywell Sensing and Productivity Solutions
Description: MLH ALL METAL PRESS SENSE -ATF
In stock: 1082 pcs
RFQ

MLH010BGC14B
Manufacturers: Honeywell Sensing and Productivity Solutions
Description: SENSOR GAUGE 0-10 BAR
In stock: 1117 pcs
RFQ

MLH010BGC17G
Manufacturers: Honeywell Sensing and Productivity Solutions
Description: MLH ALL METAL PRESS SENSE -ATF
In stock: 3935 pcs
RFQ

MLH010BGB01B
Manufacturers: Honeywell Sensing and Productivity Solutions
Description: SENSOR GAUGE 0-10 BAR
In stock: 1201 pcs
RFQ

MLH006BGG20B
Manufacturers: Honeywell Sensing and Productivity Solutions
Description: MLH ALL METAL PRESS SENSE -ATF
In stock: 2994 pcs
RFQ

MLH010BGB14E
Manufacturers: Honeywell Sensing and Productivity Solutions
Description: SENSOR GAUGE 0-10 BAR
In stock: 785 pcs
RFQ

MLH006BSG17B
Manufacturers: Honeywell Sensing and Productivity Solutions
Description: MLH ALL METAL PRESS SENSE -ATF
In stock: 5221 pcs
RFQ

MLH010BGB09A
Manufacturers: Honeywell Sensing and Productivity Solutions
Description: SENSOR GAUGE 0-10 BAR
In stock: 898 pcs
RFQ

MLH010BGB06B
Manufacturers: Honeywell Sensing and Productivity Solutions
Description: MLH ALL METAL PRESS SENSE -ATF
In stock: 2917 pcs
RFQ

MLH006BSG01B
Manufacturers: Honeywell Sensing and Productivity Solutions
Description: MLH ALL METAL PRESS SENSE
In stock: 6985 pcs
RFQ

MLH010BGD01C
Manufacturers: Honeywell Sensing and Productivity Solutions
Description: MLH ALL METAL PRESS SENSE -ATF
In stock: 5760 pcs
RFQ

Copyright © 2020 Reliable Distributor of Electronic Components

E-mail: Info@infinity-electronic.com
Address: 17F, Gaylord Commercial Building, 114-118 Lockhart Road, Wan Chai, Hong Kong